FLOOR DOOR

Side B	Side C	Side D	VERSION	H LIGHT	H FRAME	FRAME	WINDOW	GLASS	ACCESSORIES
		1 2 3	Standard RAL 7043*	2000	2100	RAL 7043	Panoramic	Fumè	C2

C1 = Enabling key for the floor button pad (single insertion) C2 = Enabling key for the floor button pad (double insertion) PM = Button pad on the wall PE = Outside lock and button pad

*Smooth - No raised edges

Approved for PRODUCTION

Confirmed By Customer:

(Sign)

.../.../...
(date)

(Name)

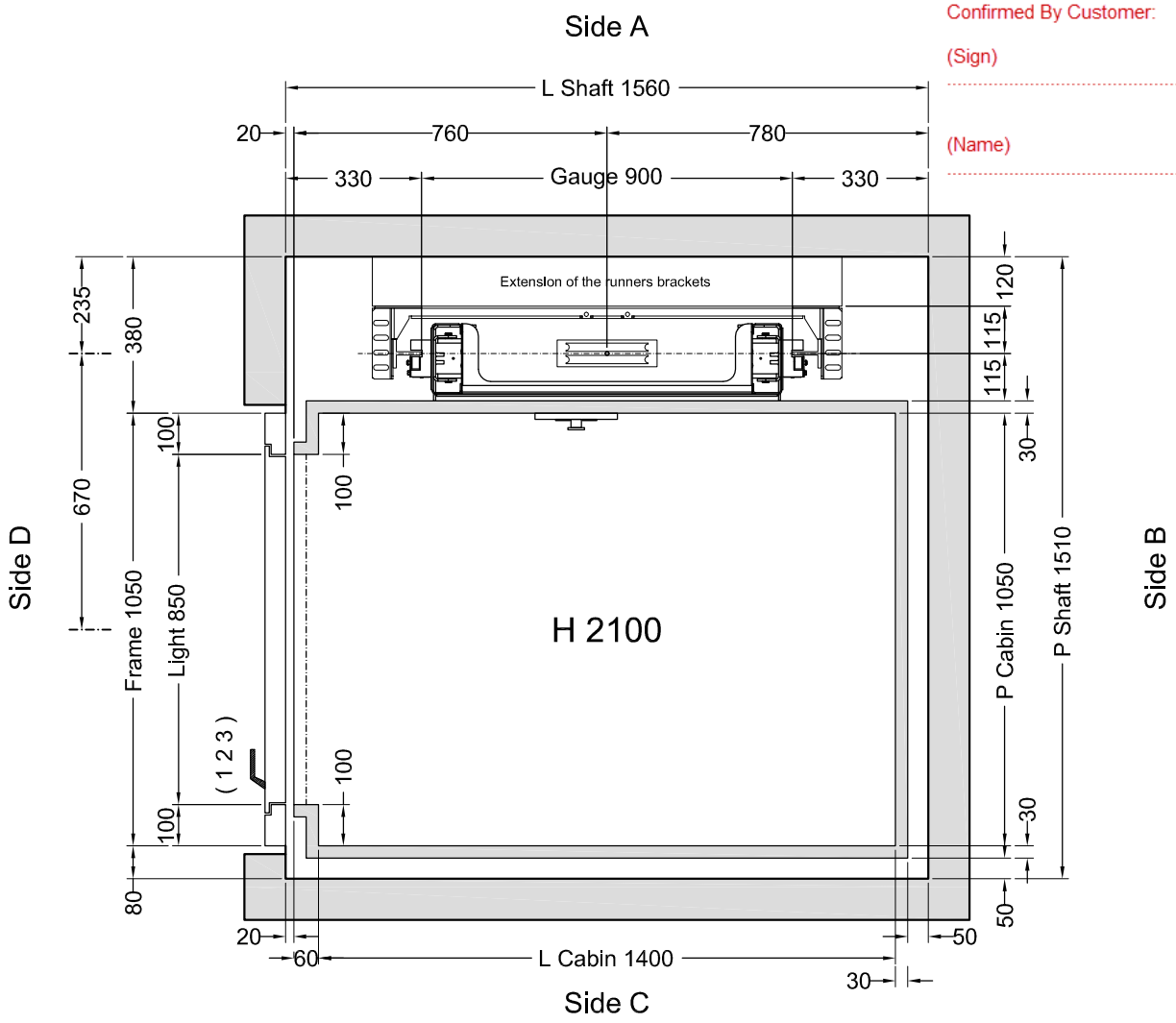

Customer own flooring: Dimensions **1430** (L) x **1050** (P) thks **15** mm Weight: **26** kg

Stops: 3 - Doors: 3

~~Preliminary Plans Only: NOT for Construction~~

Shaft in **Masonry (Muratura)**

O	VERSIONS	Description	Designer	Date	Final Design Drawings	
					Model ELFO	SHEET 1/2
O		Dimensione vano, cabina e porte	Colamarino	09/08/2013		
		Porte di piano - corsa e interpiani - materiali cabina	Colamarino	07/08/2013		SHEET DIMENS. A3
		P Vano 1560 mm (spazio dietro P.M.).	L. Del Bianco	30/01/2013		
EP	C L		Final Design Drawings L. Del Bianco	1° STESURA 11/07/12		SCALE 1:12.5
	P		CAPACITY 350 kg	AREA m² 1,47	CAPACITY	

ACCESSORI:

- Chiave abilitazione pulsantiera cabina a doppia estrazione
- Guide in barre da 2,5 m
- Pompa a mano
- Pressostato con segnalazione di sovraccarico
- Due velocità
- Interruttore blocco porta quadro
- Dispositivo falsa testata
- Maniglie CASPIM
- Telefono Lift Shop
- Fotocellula tutta parete
- Manovra automatica 2011

Indirect Installation	Speed	0,3 m/s	09/08/13 12.05	(V.2820)

THRUST DURING NORMAL OPERATION			THRUST OF SAFETY DEVICE INTERVENT.		
P	(N)	**11917**	P	(N)	619
N	(N)	**814**	N	(N)	8140
F1	(N)	**1551**	F1	(N)	2586
F2	(N)	**380**	F2	(N)	633

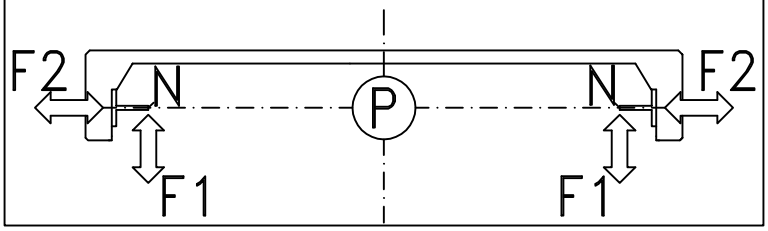

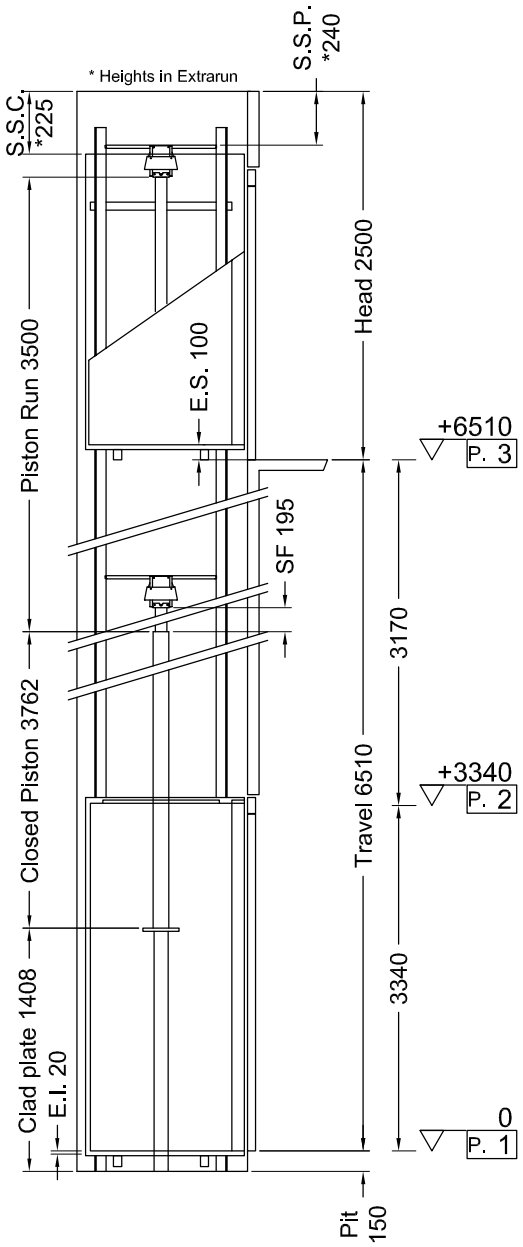

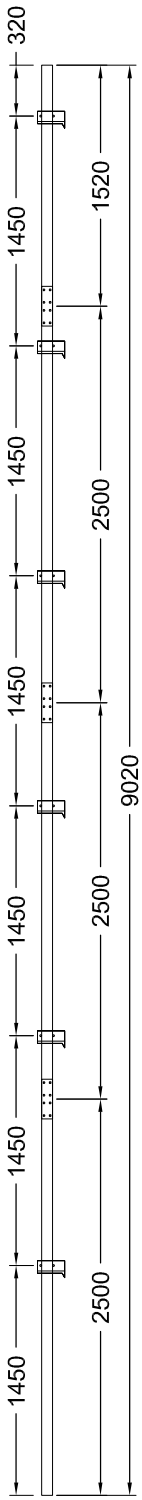

Approved for PRODUCTION

Confirmed By Customer:

(Sign) ..... / ... / ...
(date)

(Name) .....

MACHINERY LOCATION			
At floor	**1**	Length of the hose travel	**2000** (mm)
Cables enter in shaft: Side	**A**	Hydraulic unit model	**-***

CABIN	CABIN ACCESSORIES
Panels	**Similinox F12PPS**
Finishes	**Inox BA mecc.**
Oper. panel	**VERTICAL (Like finishes)**
Floor	**By Customer**
Roof	**SPOTS LED - Inox BA (Lucido)**

OTHER ACCESSORIES

Enabling key for the cabin button pad, double insertion
Guides dimension 2.5 m
Manual pump
Manostat with overweight signal
Two speed
Cabinet General switcher to enabling controller
False head device
Handles CASPIM
Telephone By Lift Shop
Full height Infra-red curtain
Automatic control 2011

~~The information contained in this drawing are completed by masonry manual rev.4 | * See masonry manual rev. 4~~

EP		Final Design Drawings L. Del Bianco	1° STESURA 11/07/12
		Final Design Drawings	
		SCALE OUT OF SCALE	SHEET 2/2